Spec.	kg
Model	Weight
SJ-04	0.5

Confirmed

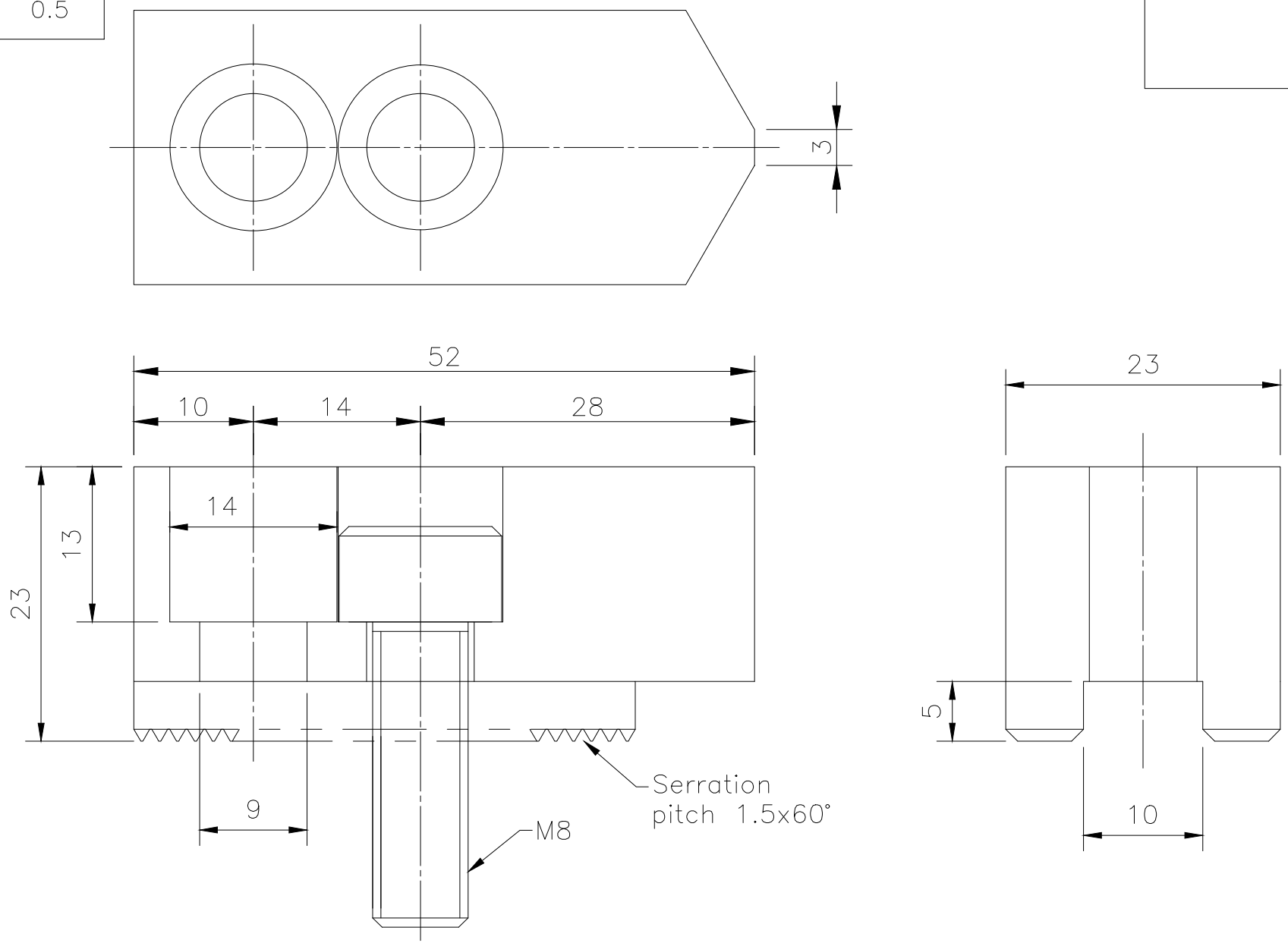

LEADER CHUCK INTERNATIONAL
+44 (0) 1827 700000
+353 (0)1 254 2555
INFORMATION@LEADERCHUCK.COM
LEADERCHUCK.COM

TITLE: Standard Soft Jaws

DRAWING NO.: A3\AG-SJ-04

LEADER CHUCK INTERNATIONAL