Spec.	Eff. piston area cm^2		mm	Chucking Dia. mm		kgf	kg/cm^2	kg
Model	Extend	Retract	Jaw Stroke (Dia.)	Max.	min.	Max clamping force	Max. pressure	Weight
VP−205	28.8	24.9	6.4	135	14	1700	23	14.4

Confirmed

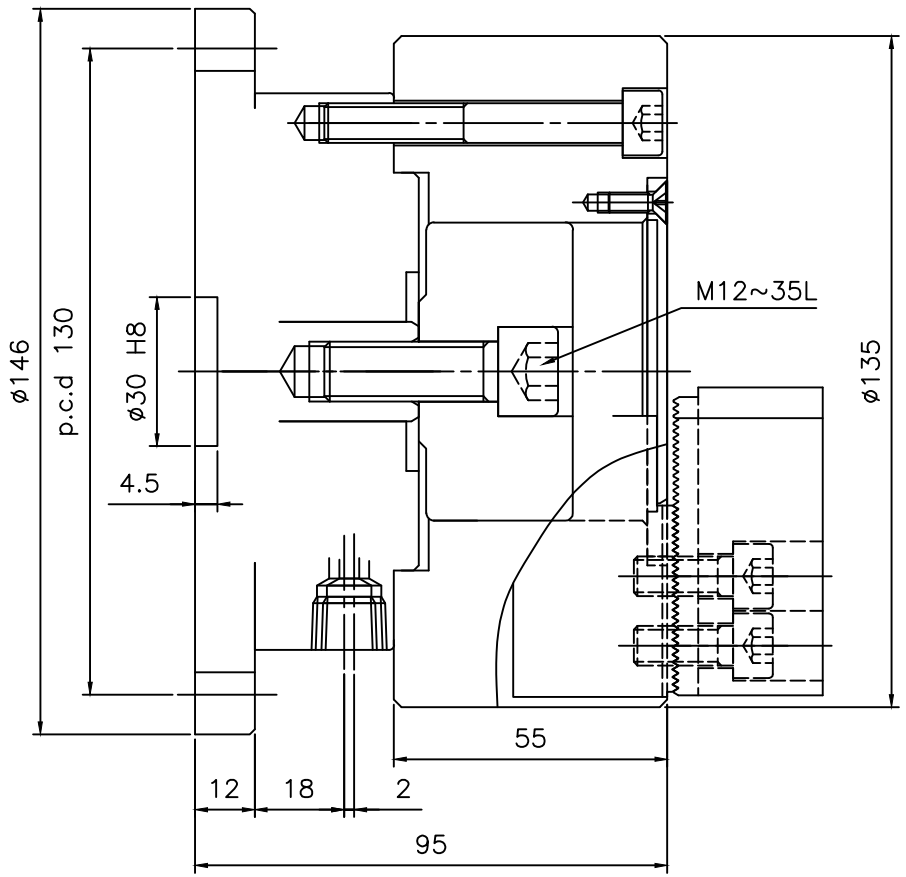

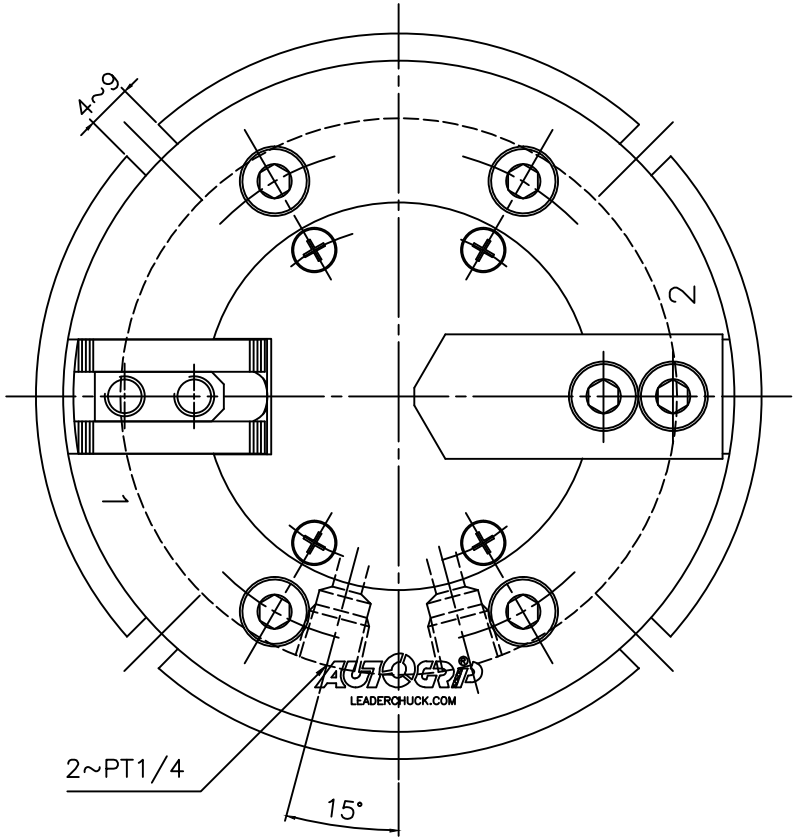

LEADER CHUCK INTERNATIONAL
+44 (0) 1827 700000
+353 (0)1 254 2555
INFORMATION@LEADERCHUCK.COM
LEADERCHUCK.COM

TITLE:
2 Jaw Closed Centre Self Contained Power Chuck

DRAWING NO.:
A3\AG−VP−205

LEADER CHUCK INTERNATIONAL