Spec. / Model	mm Plunger Stroke	mm Jaw Stroke (Dia.)	Chucking Dia. mm Max.	Chucking Dia. mm min.	kgf Max D.B. pull	kgf Max clamping force	r.p.m. Max speed	GD² kg·m²	kg Weight	Confirmed
3U−205	6	3	84	15	1420	4050	8000	0.018	6.8	

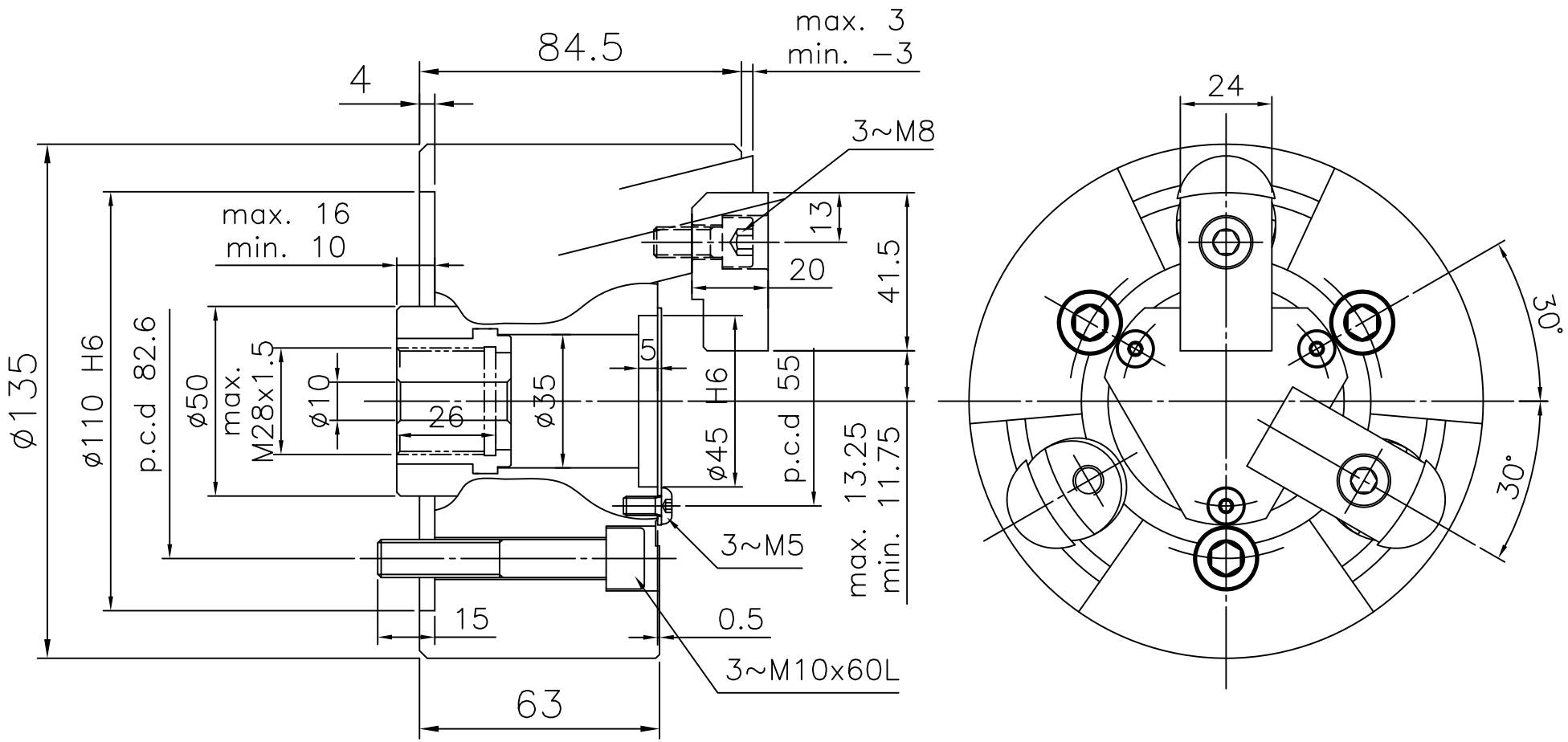

LEADER CHUCK INTERNATIONAL
+44 (0) 1827 700000
+353 (0)1 254 2555
INFORMATION@LEADERCHUCK.COM
LEADERCHUCK.COM

TITLE: Thru−Hole Pull Lock Chuck

DRAWING NO.: A4\AG−3U−205

LEADER CHUCK INTERNATIONAL