Spec. Model	mm Plunger Stroke	mm Jaw Stroke (Dia.)	Gripping Dia. mm Max.	Gripping Dia. mm min.	Allowable hydraulic cylinder thrust kgf Max D.B. pull	Maximum clamping force kgf Max clamping force	Maximum number of revolutions r.p.m. Max speed	GD^2 kg m^2	weight kg·m^2
4T−12	20	16	304	50	2200	8100	1500	0.66	57.6

Confirmed

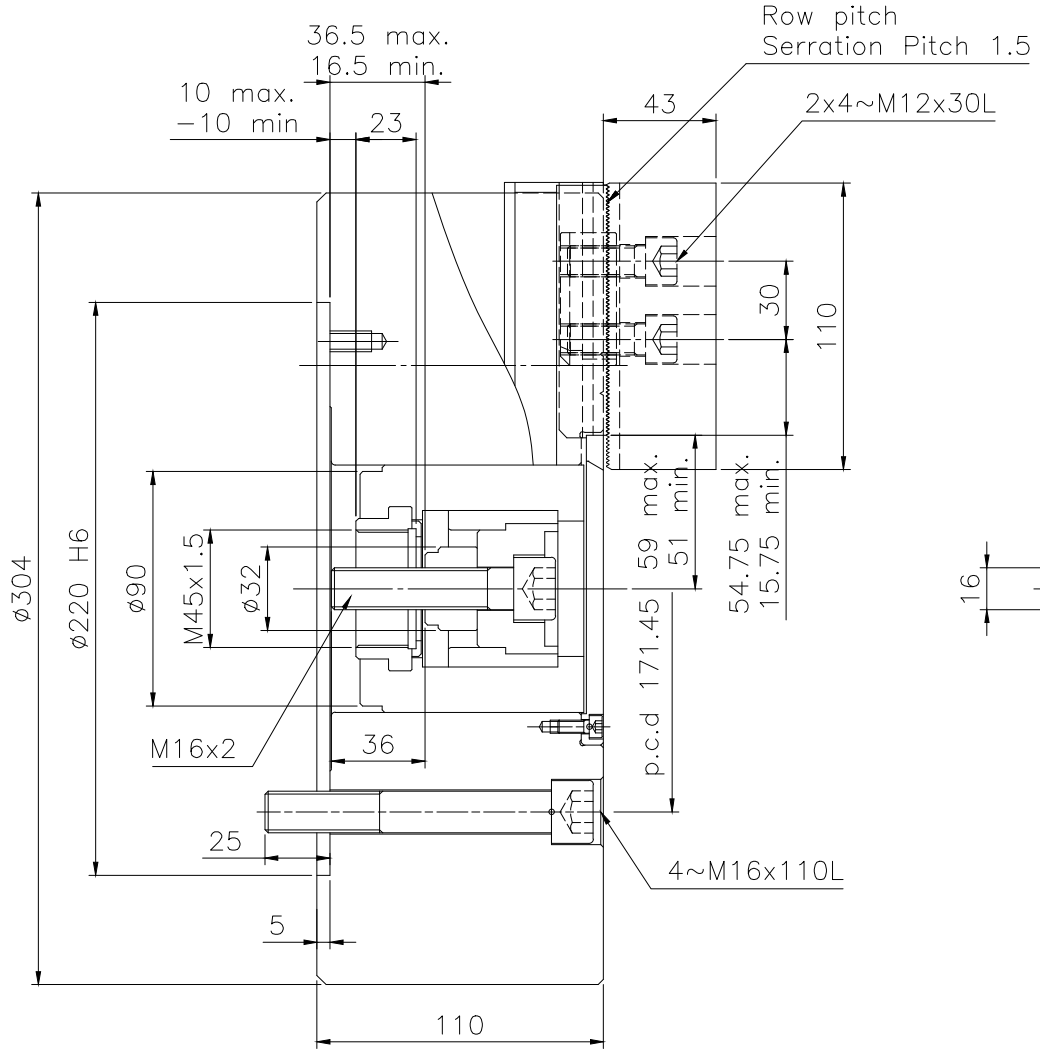

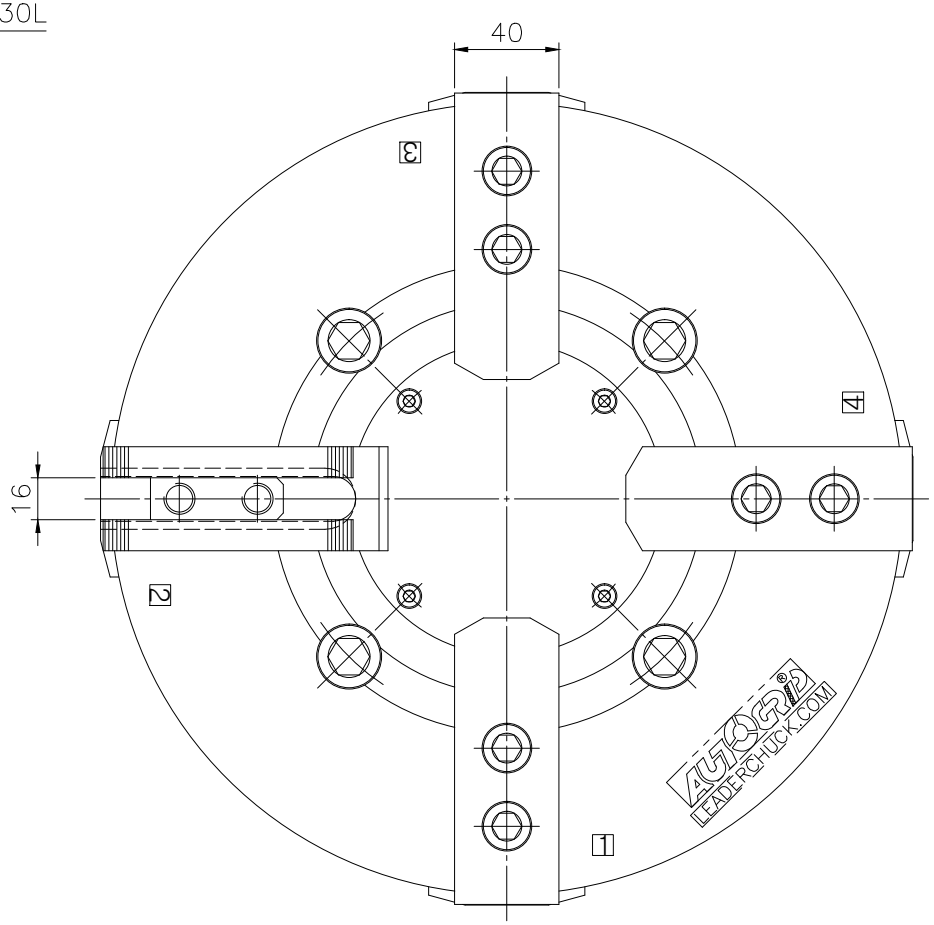

LEADER CHUCK INTERNATIONAL
+44 (0) 1827 700000
+353 (0)1 254 2555
INFORMATION@LEADERCHUCK.COM
LEADERCHUCK.COM

TITLE: Double acting four−jaw chuck

DRAWING NO.: A3\AG−4T−12

LEADER CHUCK INTERNATIONAL