Spec. Model	mm Plunger Stroke	mm Jaw Stroke (Dia.)	Chucking Dia. mm Max.	Chucking Dia. mm min.	kgf Max D.B. pull	kgf Max clamping force	r.p.m. Max speed	I kg m²	kg Weight	Confirmed
3P-10A6	25	8.8	254	22	2950	11000	4000	0.30	42	

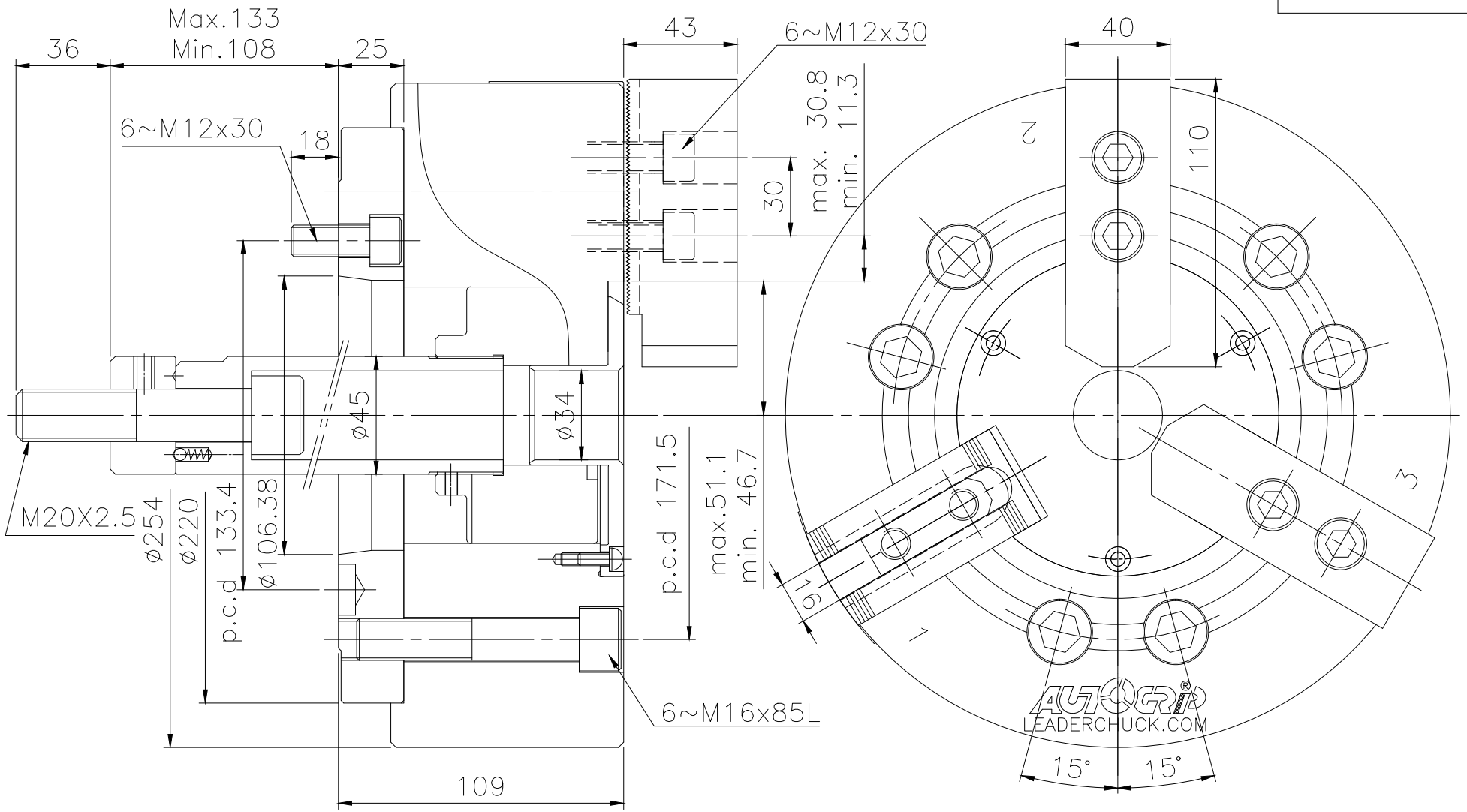

LEADER CHUCK INTERNATIONAL
+44 (0) 1827 700000
+353 (0)1 254 2555
INFORMATION@LEADERCHUCK.COM
LEADERCHUCK.COM

TITLE: Three-jaw real power chuck

DRAWING NO.: A4\AG-3P-10A6

LEADER CHUCK INTERNATIONAL