Spec. / Model	mm Plunger Stroke	mm Jaw Stroke (Dia.)	Chucking Dia. mm Max.	Chucking Dia. mm min.	kgf Max D.B. pull	kgf Max clamping force	r.p.m. Max speed	I kg m²	kg Weight	Confirmed
3P-06A5	20	8.5	165	14	1830	5350	5250	0.05	14	

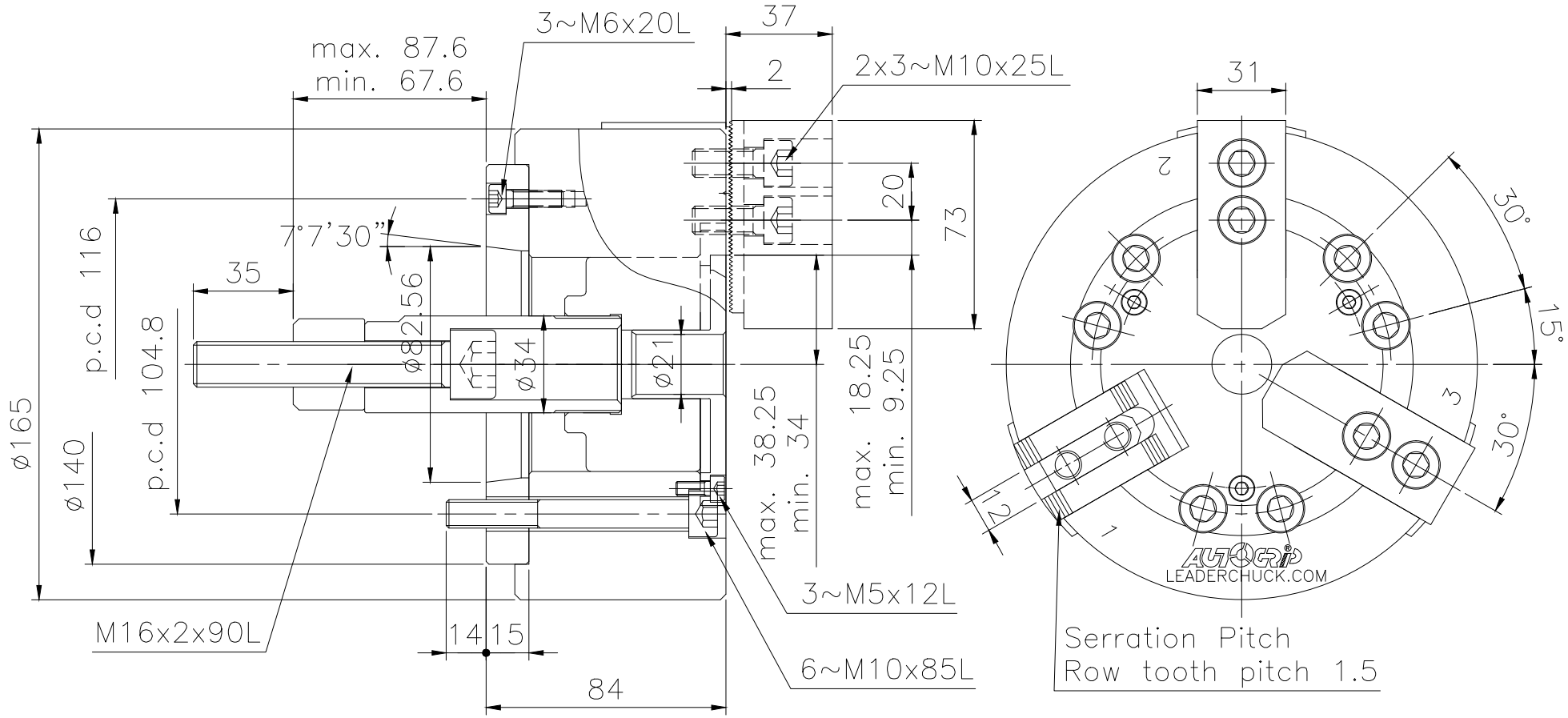

LEADER CHUCK INTERNATIONAL
+44 (0) 1827 700000
+353 (0)1 254 2555
INFORMATION@LEADERCHUCK.COM
LEADERCHUCK.COM

TITLE: Zhongshi three-jaw chuck

DRAWING NO.: A4\AG-3P-06A5

LEADER CHUCK INTERNATIONAL