Spec. / Model	mm Plunger Stroke	mm Jaw Stroke (Dia.)	Chucking Dia. mm Max.	Chucking Dia. mm min.	kgf Max D.B. pull	kgf Max clamping force	r.p.m. Max speed	GD^2 kg m^2	kg Weight	Confirmed
3P-03	10	4.8	85	3	460	1150	7000	0.004	1.8	

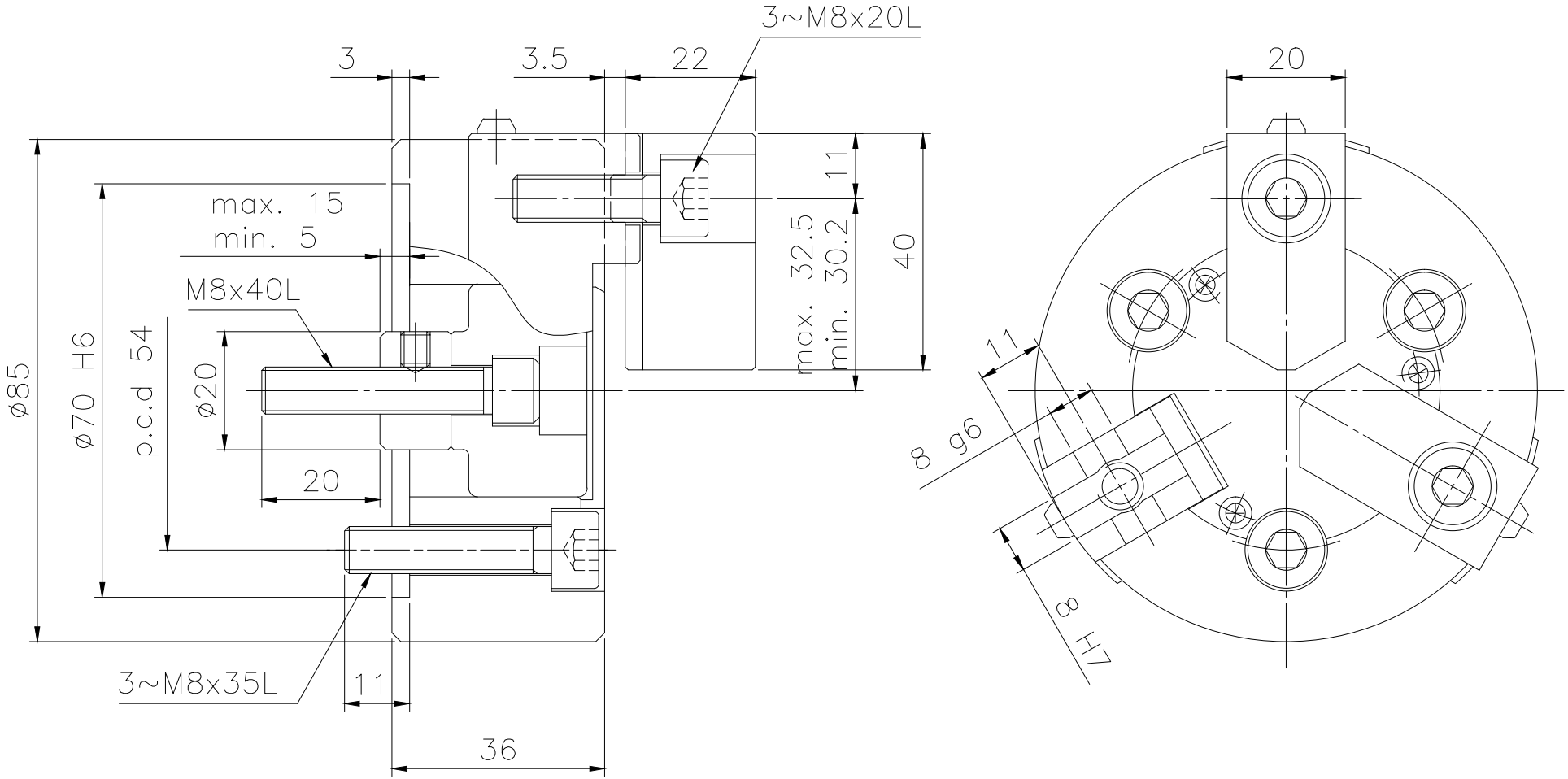

LEADER CHUCK INTERNATIONAL
+44 (0) 1827 700000
+353 (0)1 254 2555
INFORMATION@LEADERCHUCK.COM
LEADERCHUCK.COM

TITLE: Zhongshi three-jaw power chuck

DRAWING NO.: A4\AG-3P-03

LEADER CHUCK INTERNATIONAL