Spec. Model	mm Plunger Stroke	mm Jaw Stroke (Dia.)	Chucking Dia. mm Max.	Chucking Dia. mm min.	Allowable hydraulic cylinder thrust kgf Max D.B. pull	Maximum clamping force kgf Max clamping force	Maximum number of revolutions r.p.m. Max speed	GD² kg·m²	kg Weight
3E-08	10	5	150	50	2530	8150	5000	0.14	26.5

Confirmed

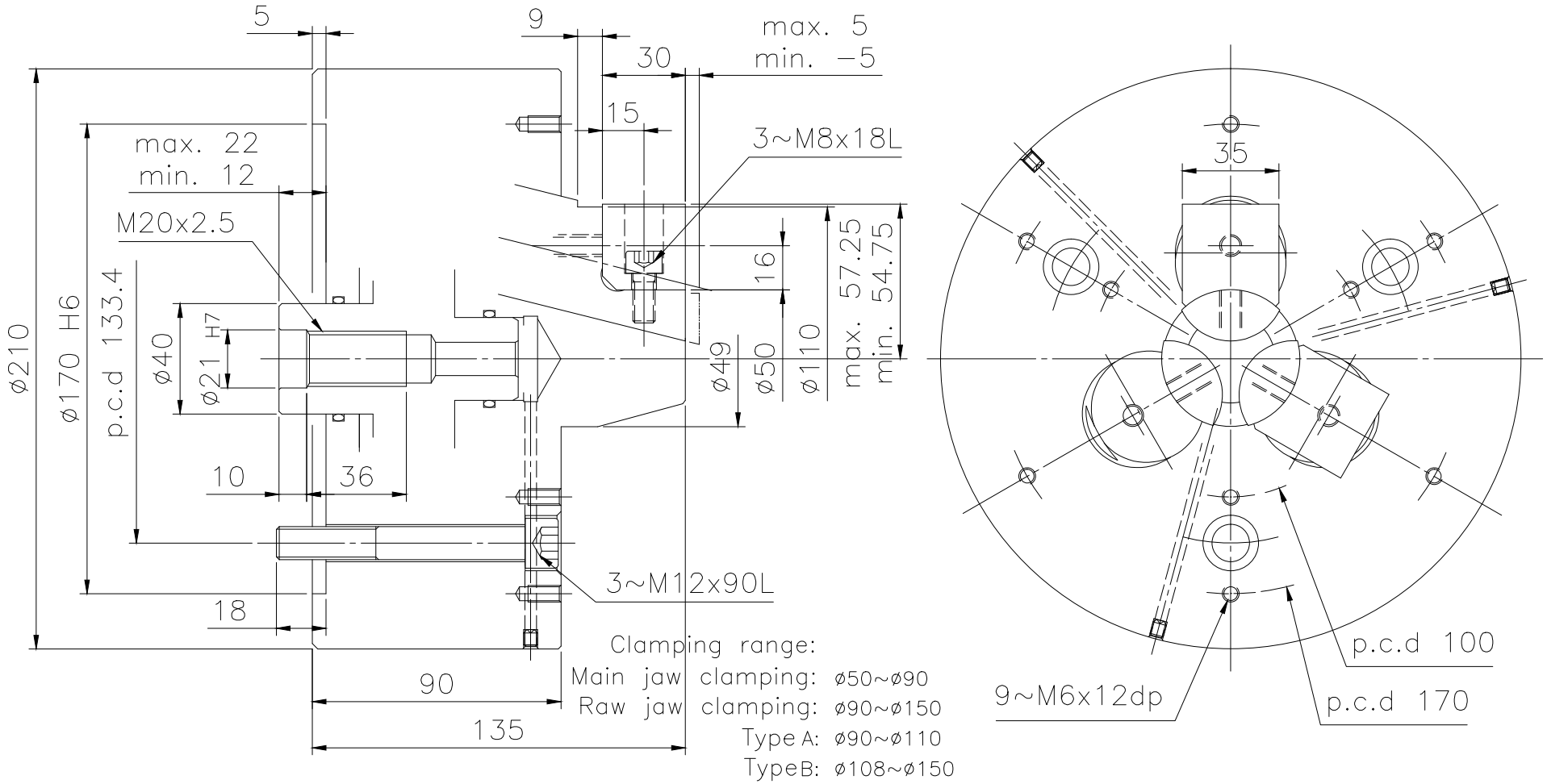

Clamping range:
Main jaw clamping: ø50~ø90
Raw jaw clamping: ø90~ø150
Type A: ø90~ø110
TypeB: ø108~ø150

LEADER CHUCK INTERNATIONAL
+44 (0) 1827 700000
+353 (0)1 254 2555
INFORMATION@LEADERCHUCK.COM
LEADERCHUCK.COM

TITLE: Expansible Pull Lock Chuck

DRAWING NO.: A4\AG-3E-08

LEADER CHUCK INTERNATIONAL