Spec. Model	mm Plunger Stroke	mm Jaw Stroke (Dia.)	Chucking Dia. mm Max.	Chucking Dia. mm min.	kgf Max D.B. pull	kgf Max clamping force	r.p.m. Max speed	I kg m²	kg Weight	Confirmed
1L−06A5	20	16	168	5	1250	2780	3800	0.06	14.3	

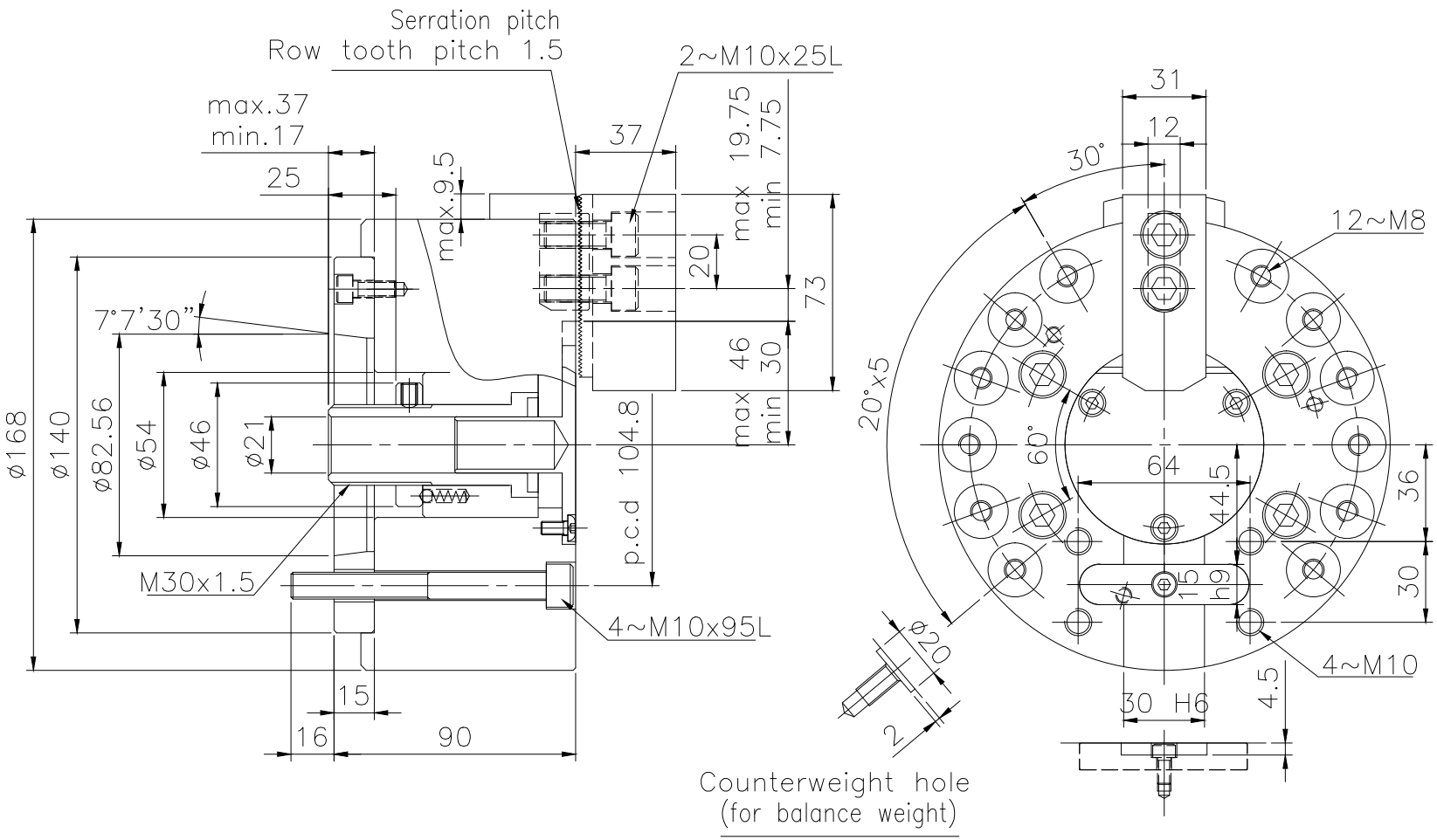

LEADER CHUCK INTERNATIONAL
+44 (0) 1827 700000
+353 (0)1 254 2555
INFORMATION@LEADERCHUCK.COM
LEADERCHUCK.COM

TITLE:
Extra long jaw stroke
single−jaw power chuck

DRAWING NO.:
A4\AG−1L06A5

LEADER CHUCK INTERNATIONAL