Spec. Model	mm Plunger Stroke	mm Jaw Stroke	Chucking Dia. mm Max.	Chucking Dia. mm min.	kgf Max D.B. pull	kgf Max clamping force	r.p.m. Max speed	I kg m²	kg Weight	Confirmed
1L−08	25	20	215	7	1600	3800	3000	0.15	24.5	

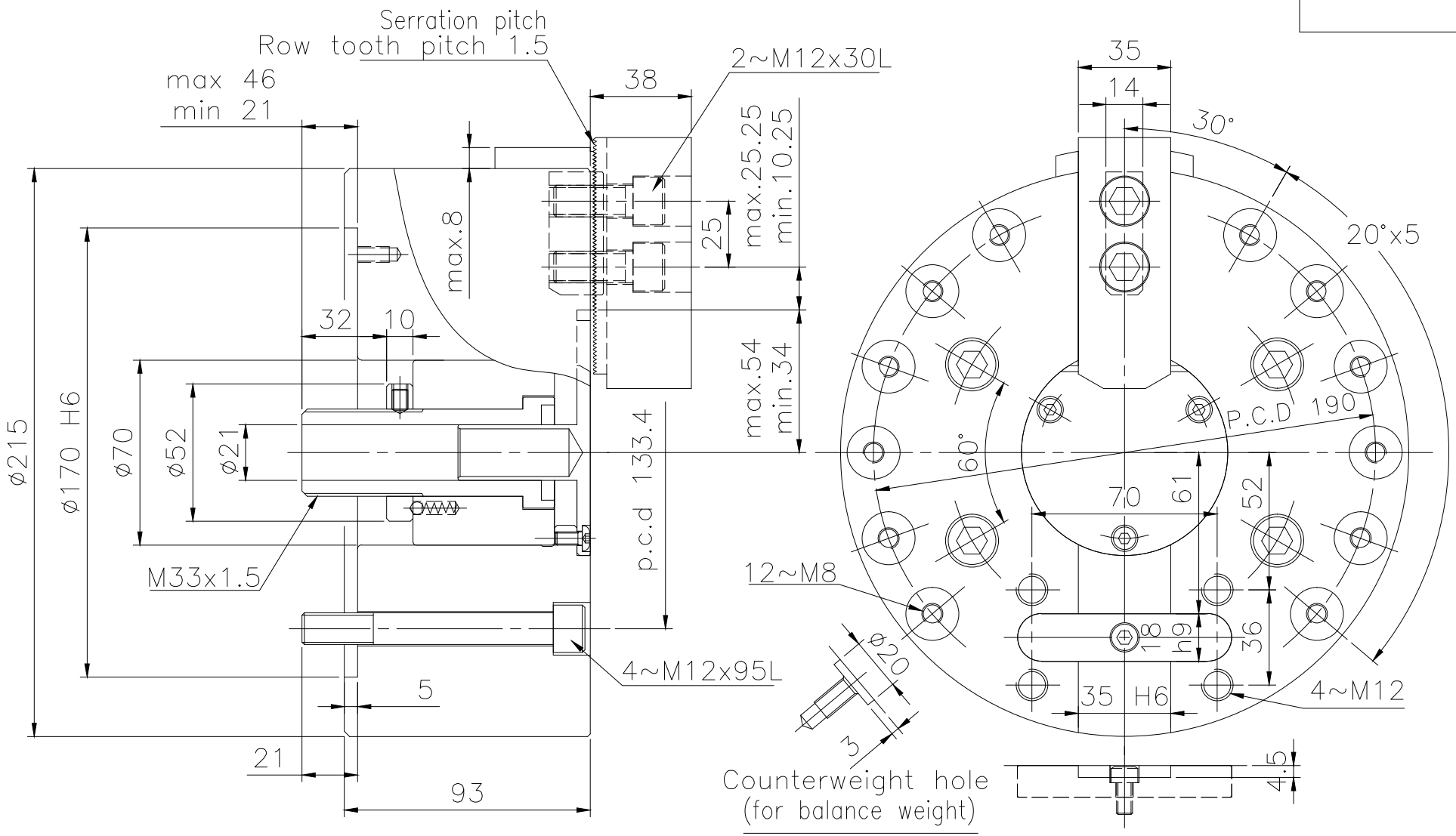

LEADER CHUCK INTERNATIONAL
+44 (0) 1827 700000
+353 (0)1 254 2555
INFORMATION@LEADERCHUCK.COM
LEADERCHUCK.COM

TITLE: Extra long jaw stroke single−jaw power chuck

DRAWING NO.: A4\AG−1L08

LEADER CHUCK INTERNATIONAL