DELTA ZERO DOUBLE RISER
FOR 100MM T-SLOT SPACING
BY ORANGE VISE COMPANY

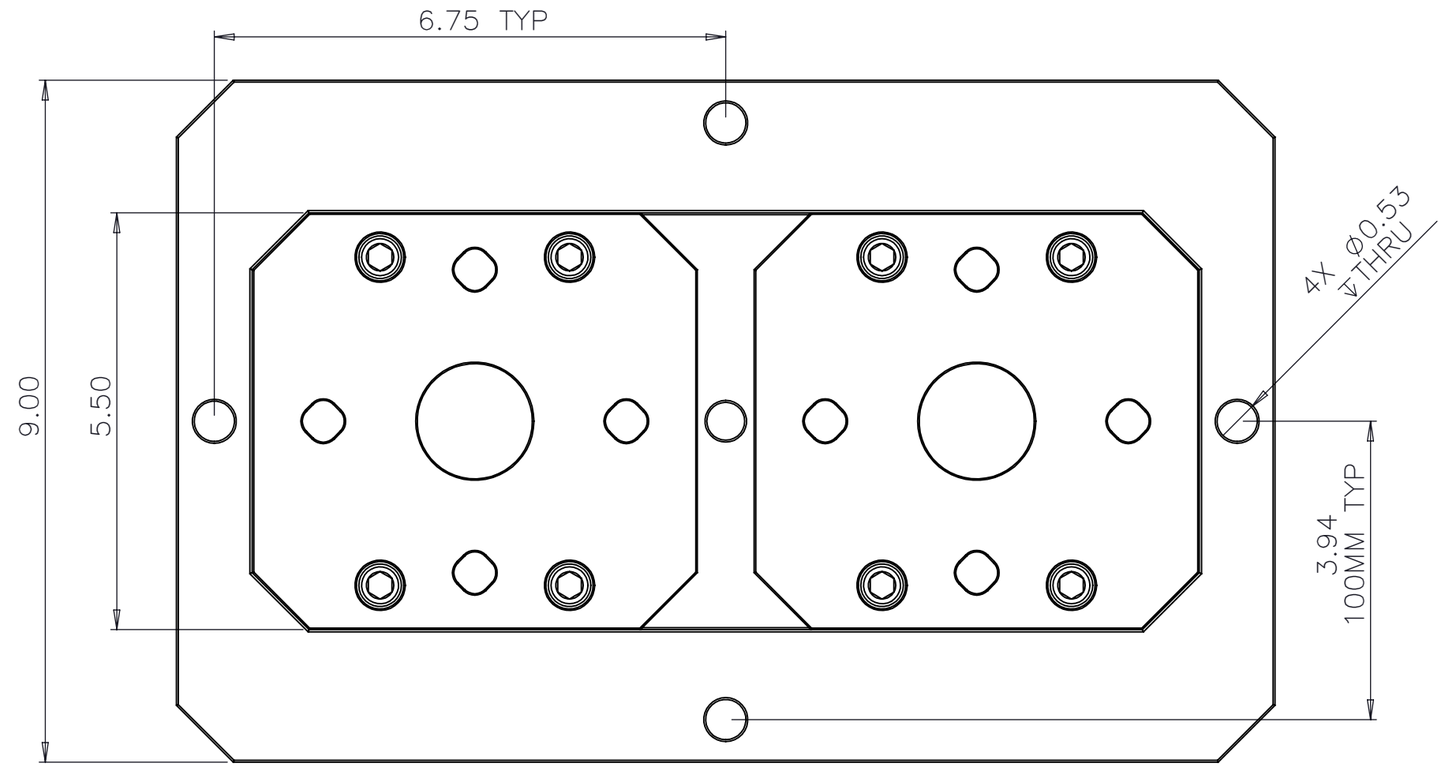

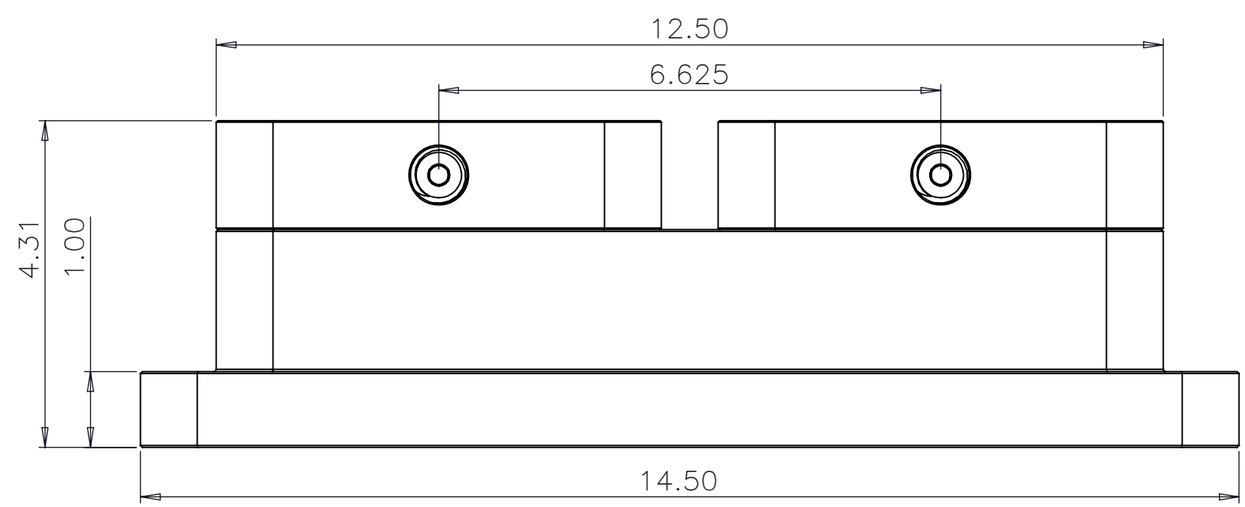

ORANGE
VISE COMPANY